"16' x 76' "The Olympus"

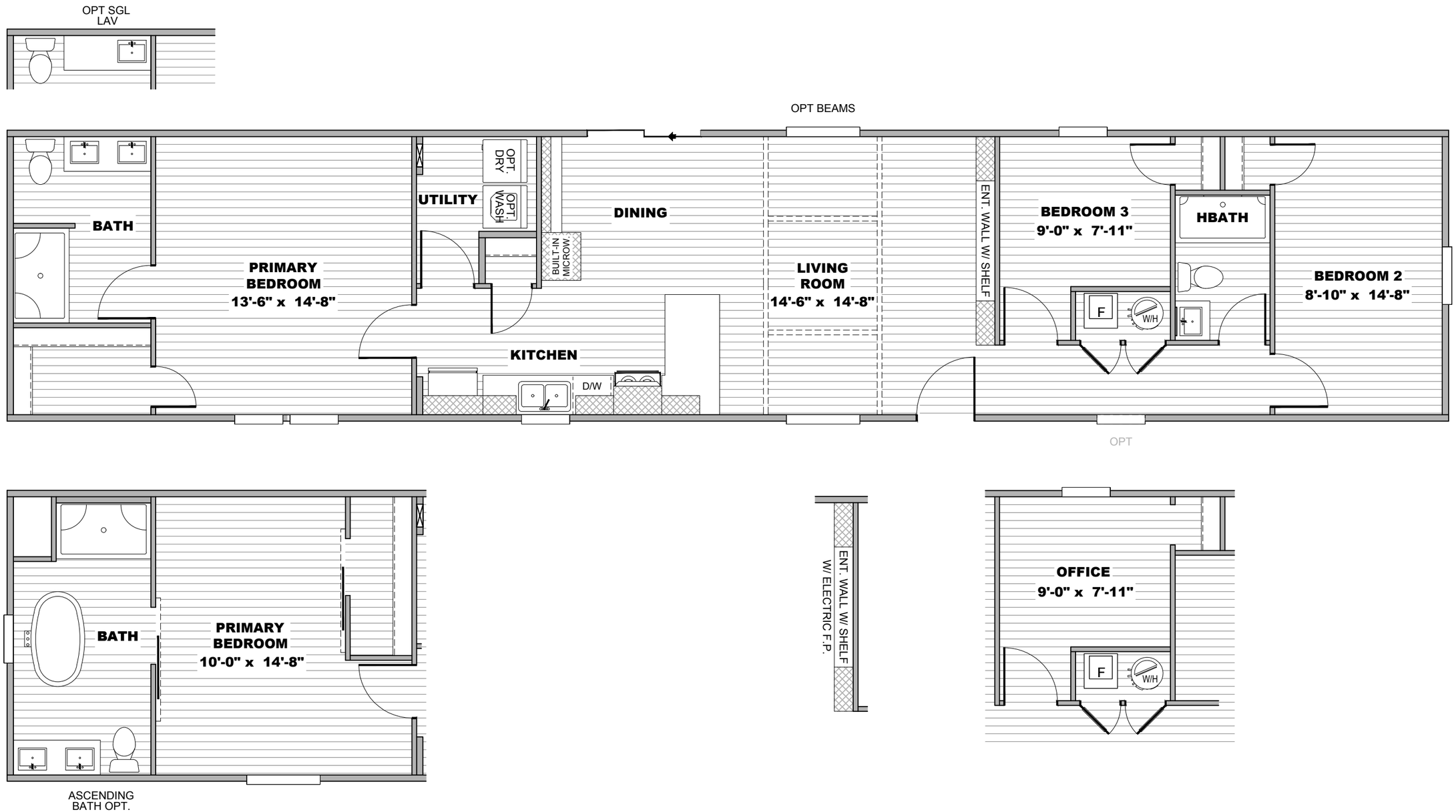

MODEL #SMT16763O

SQ.FT. 1,165

DRAWING # SMT-1676-32-1-184

File Path:C:\Users\MerrittP\OneDrive - Clayton Homes\Desktop\AutoCAD\922 - Maynardville\184 Inch New Models\Summit Series\SMT-1676-32-1-184 (The Olympus)\SMT-1676-32-1-184.dwg, Last Saved By:MerrittP, Saved Date:9/3/2026 3:51 PM, Date Printed:9/3/26 5:20 PM

20 lb ROOF LOAD SIDEWALL OPENING PIER LOAD 16' BOX WIDTH	SIDEWALL OPENING (FT) REQUIRED PIER LOAD (LBS)					
	3	4	5	6	8	10
	1244	1413	1581	1750	2088	2425

*FOR 30 lb & 40 lb ROOF LOAD REFER TO TABLES 7 & 7a IN THE INSTALLATION MANUAL.

PIER LEGEND

- ☐ = PIER MAIN BEAM
- ⊠ = PIER PERIMETER
- ■ = PIER PORCH/RECESSED ENTRY

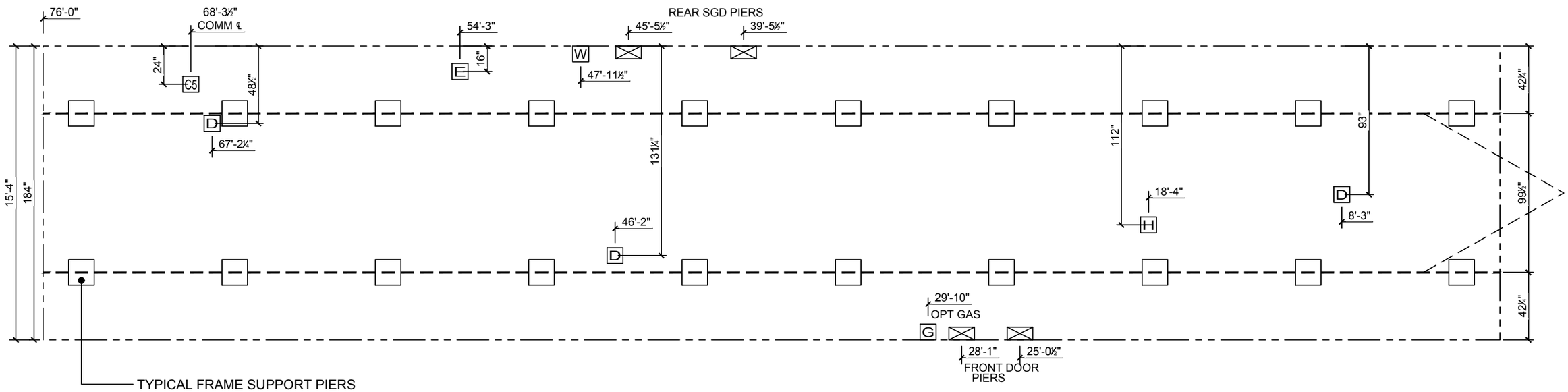

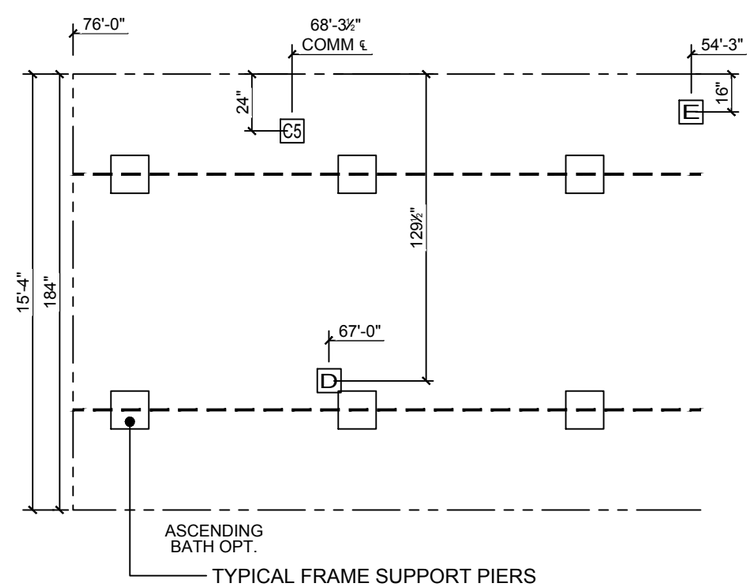

NOTES:

1. REFER TO TABLES 6 AND 6a IN THE INSTALLATION MANUAL FOR LOAD ON FRAME PIER FOOTINGS FOR HOMES THAT DO NOT REQUIRE PERIMETER BLOCKING. REFER TO TABLES 7 AND 7a IN THE INSTALLATION MANUAL FOR LOAD ON FRAME PIER FOOTINGS FOR HOMES THAT REQUIRE PERIMETER BLOCKING. REFER TO TABLES 10 AND 10a TO DETERMINE FOOTING SIZE FOR ALL PIERS.
2. REFER TO TABLE 9 FOR PIER CONFIGURATION AND MAXIMUM ALLOWABLE HEIGHTS. CROSS REFERENCE THE PIER HEIGHT WITH THE MAXIMUM ALLOWABLE FLOOR HEIGHT LISTED IN THE FRAME TIEDOWN CHARTS (TABLE 18, 19, AND 20).
3. THE MAXIMUM SPACING FOR FRAME SUPPORT PIERS FOR 8" I-BEAMS IS 8 FEET, 10" & 12" I-BEAMS IS 10 FEET.
4. SERVICE DROP LOCATIONS IDENTIFIED ARE APPROXIMATE.
5. FLOOR WIDTH SHOWN IS FOR STANDARD PRODUCT ONLY. CONTACT THE MFG FACILITY FOR SPECIFICATIONS OF OPTIONS ORDERED.

SERVICE DROP LEGEND

- E = ELECTRICAL DROP
- W = WATER INLET
- D = DWV PLUMBING DROP
- G = GAS INLET
- H = HVAC DROP
- C5 = COMMUNICATIONS DROP
- EX = ELECTRICAL CROSSOVER
- WX = WATER CROSSOVER
- HX = HVAC CROSSOVER

Clayton home building group

REVISION	DATE

MODEL NAME: Summit 76' - The Olympus
MODEL NO.: SMT16763O
MODEL SQ. FT.: 1,165
BOX SIZE: 16' x 76'
DRAWN BY: Parker Merritt
DATE DRAWN: 8/24/2026
DATE PRINTED: 9/3/2026
SCALE: 3/16"=1' * UNLESS OTHERWISE NOTED
PLAN NO.: SMT-1676-32-1-184
SHEET NAME: FRAME PIERS
SHEET NO.: SU-1.

File Path:C:\Users\MerrittP\OneDrive - Clayton Homes\Desktop\AutoCAD\922 - Maynardville\184 Inch New Models\Summit Series\SMT-1676-32-1-184 (The Olympus)\SMT-1676-32-1-184.dwg, Last Saved By:MerrittP, Saved Date:9/2/2026 5:45 PM

REAR EXTERIOR ELEVATION

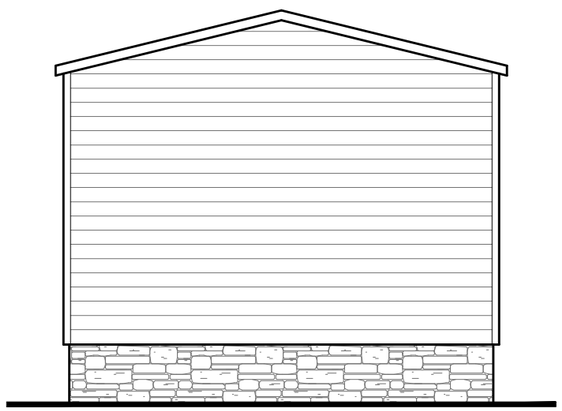

REAR END EXTERIOR ELEVATION

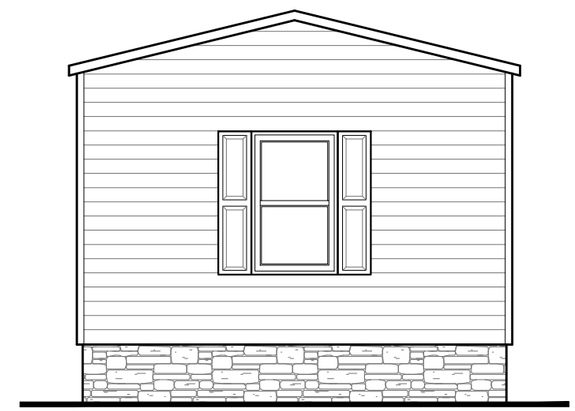

HITCH END EXTERIOR ELEVATION

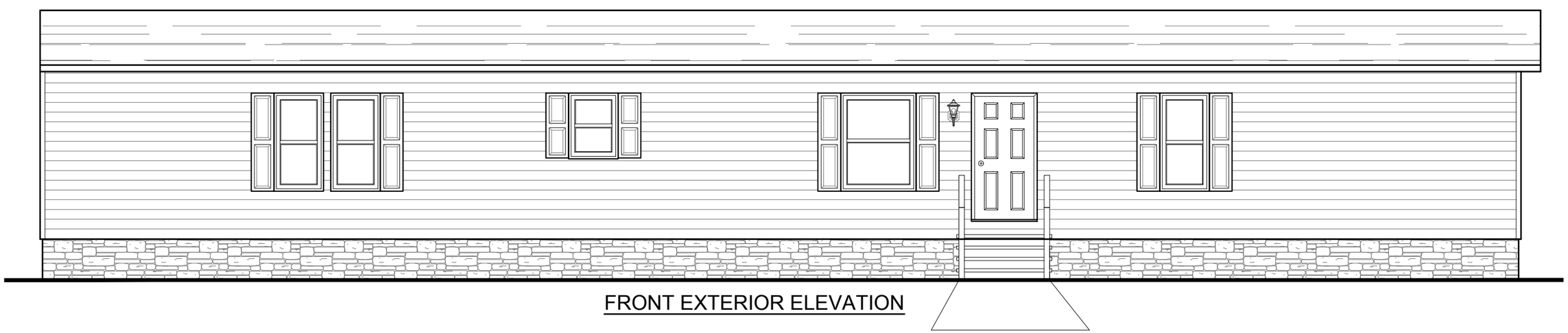

FRONT EXTERIOR ELEVATION

Clayton home building group

REVISION	DATE

MODEL NAME: Summit 76' - The Olympus

MODEL NO.: SMT16763O

BOX SIZE: 16' x 76'

MODEL SQ. FT.: 1,165

DRAWN BY: Parker Merritt

DATE DRAWN: 8/24/2026

DATE PRINTED: 9/21/2026

SCALE: 3/16"=1'

* UNLESS OTHERWISE NOTED

PLAN NO.: SMT-1676-32-1-184

SHEET NAME: EXTERIORS

SHEET NO.: EX-1.

File Path:C:\Users\MeritttP\OneDrive - Clayton Homes\Desktop\AutoCAD\922- Maynardville\184 Inch New Models\Summit Series\SMT-1676-32-1-184 (The Olympus)\SMT-1676-32-1-184.dwg, Last Saved By:MeritttP , Saved Date:9/21/2026 4:22 PM

REAR EXTERIOR ELEVATION

REAR END EXTERIOR ELEVATION
ASCENDING BATH OPT.

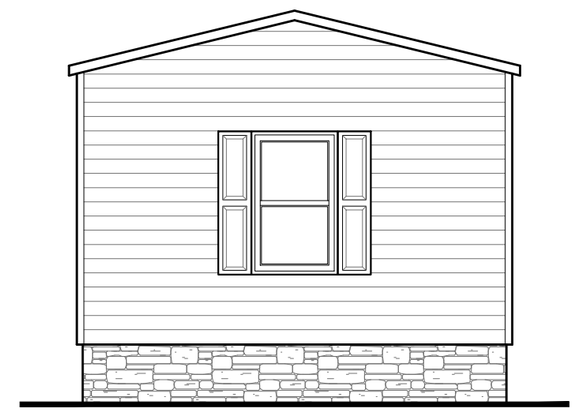

HITCH END EXTERIOR ELEVATION

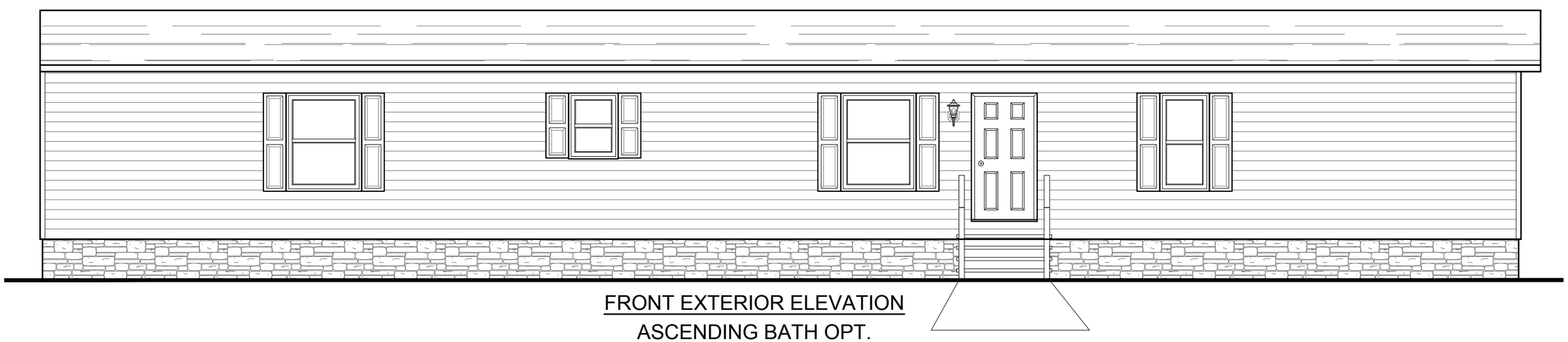

FRONT EXTERIOR ELEVATION
ASCENDING BATH OPT.

Clayton home building group

REVISION	DATE

MODEL NAME: Summit 76' - The Olympus
MODEL NO.: SMT16763O
BOX SIZE: 16' x 76'
MODEL SQ. FT.: 1,165

DRAWN BY: Parker Merritt
DATE DRAWN: 8/24/2026
DATE PRINTED: 9/21/2026
SCALE: 3/16"=1'
* UNLESS OTHERWISE NOTED
PLAN NO.: SMT-1676-32-1-184
SHEET NAME: OPT EXTERIORS
SHEET NO.: EX-1.1.

File Path:C:\Users\MeritttP\OneDrive - Clayton Homes\Desktop\AutoCAD\922- Maynardville\184 Inch New Models\Summit Series\SMT-1676-32-1-184 (The Olympus)\SMT-1676-32-1-184.dwg, Last Saved By:MeritttP , Saved Date:9/21/2026 4:22 PM

*ALL BEDROOMS ARE UNDER 35' FOR EGRESS

NOTE ALL FLOOR REGISTERS ARE 4x10 UNLESS OTHERWISE NOTED

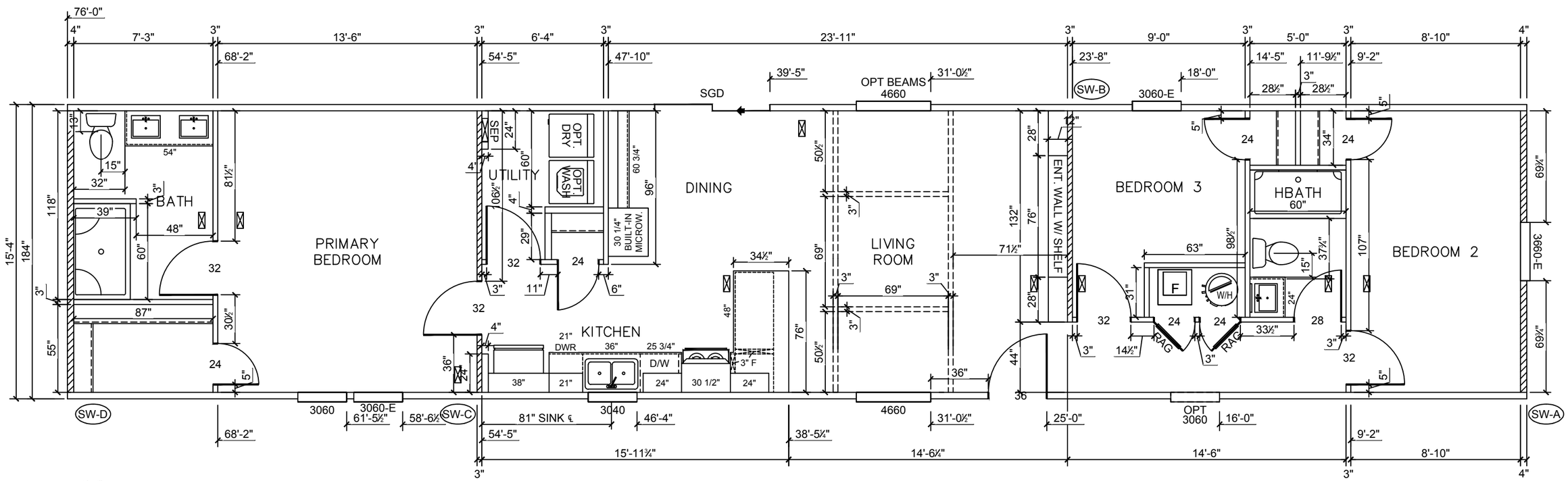

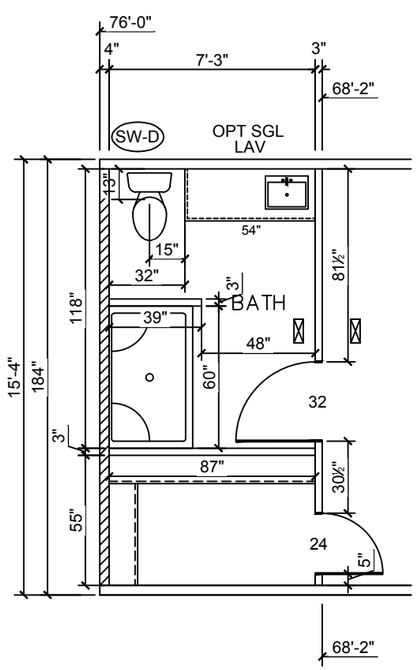

Model # SMT-1676-32-1-184

Box Width =	184 "	Single wide	Minimum Joist Spacing 16 "
Box Length =	76 ft.	99.5" 10" MIN.IBEAM	No Offset Box
No Skylights			No Clerestory
No Porches			No Origami Dormer
Joist Size =	#2 sp 2x6	Lags 9Mx3"	No Sunken Floor
			No Parapet Roof

Version R14.02

Wind Zone 1 Standard Roof — 7/16" Rated Sheathing and Ceiling Board with 15 ga staple @ 6/12 (286,315) Chords: 6. 2x4 SPF #3 Top Plate spliced w/ 3x4 MCP & 1x6 SPF Rail spliced w/ 3x4 MCP — 96 inch sidewall

Diaphragm Construction: Block Dist. X=0'

Shearwall	Dist./ Hitch	Length	PLF	# of Joists	Lags	Notes	SW1/SW2
A	0 '	139.5 "	250	2	3/3	Split Shearwall *	69.75/69.75
D	76 '	128 "	250	2	3/1		

Wind Zone 2 Standard Roof — 7/16" Rated Sheathing and Ceiling Board with 15 ga staple @ 6/12 (286,315) Chords: 6. 2x4 SPF #3 Top Plate spliced w/ 3x4 MCP & 1x6 SPF Rail spliced w/ 3x4 MCP — 96 inch sidewall

Diaphragm Construction: Block Dist. X=0'

Shearwall	Dist./ Hitch	Length	PLF	# of Joists	Lags	Notes	SW1/SW2
A	0 '	139.5 "	250	2	3/3	Split Shearwall *	69.75/69.75
B	23.79 '	128 "	430	3	4/1		
C	54.54 '	142.5 "	430	4	4/4	Split Shearwall	36/106.5
D	76 '	128 "	250	2	3/1		

Wind Zone 3 Standard Roof — 7/16" Rated Sheathing and Ceiling Board with 15 ga staple @ 6/12 (286,315) Chords: 6. 2x4 SPF #3 Top Plate spliced w/ 3x4 MCP & 1x6 SPF Rail spliced w/ 3x4 MCP — 96 inch sidewall

Diaphragm Construction: Block Dist. X=0'

Shearwall	Dist./ Hitch	Length	PLF	# of Joists	Lags	Notes	
A	0 '	139.5 "	250	2	3/3	Split Shearwall *	69.75/69.75
B	23.79 '	128 "	520	4	5/2		
C	54.54 '	142.5 "	430	4	4/4	Split Shearwall	36/106.5
D	76 '	128 "	250	2	3/1		

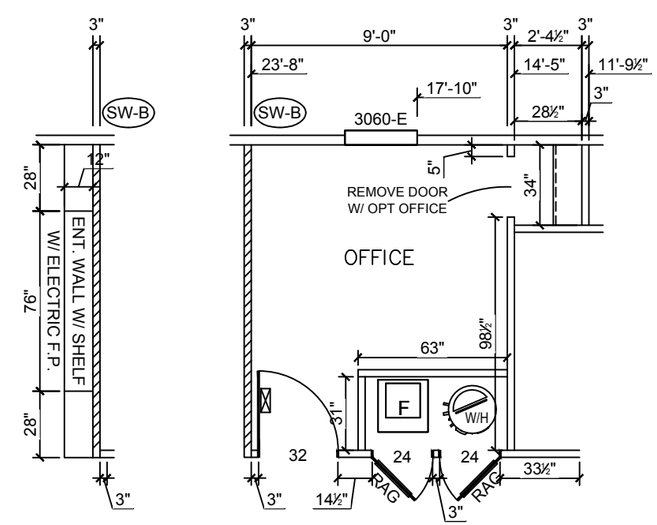

Clayton home building group

DATE	REVISION

MODEL NAME: Summit 76' - The Olympus

MODEL NO.: SMT16763O

MODEL SQ. FT.: 1,165

BOX SIZE: 16' x 76'

DRAWN BY: Parker Merritt

DATE DRAWN: 8/24/2026

DATE PRINTED: 9/3/2026

SCALE: 3/16"=1'

* UNLESS OTHERWISE NOTED

PLAN NO.: SMT-1676-32-1-184

SHEET NAME: PRIMARY PLAN

SHEET NO.: A-2.

File Path:C:\Users\MerrittP\OneDrive - Clayton Homes\Desktop\AutoCAD\922 - Maynardville\184 Inch New Models\Summit Series\SMT-1676-32-1-184 (The Olympus)\SMT-1676-32-1-184.dwg, Last Saved By:MerrittP, Saved Date:9/3/2026 3:51 PM

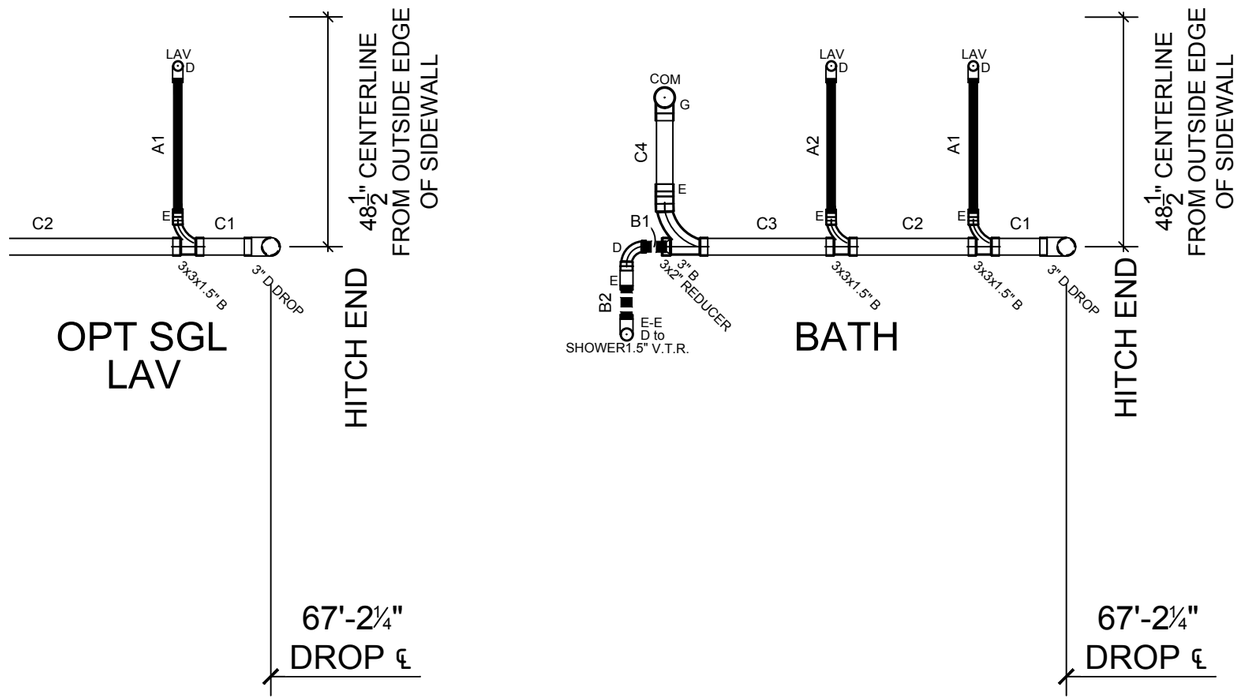

PIPE SIZES

3"

2"

1 1/2"

PARTS LEGEND

A SANITARY TEE (T-Y)	B LONG TURN (T-Y)	C ~4 BEND	G 4x3 CLOSET ELBOW	H DOUBLE ELL	I 22~2° ELL

D LONG TURN ~4 BEND	E 45° ELL	F DOUBLE SANITARY TEE	J 45° Y	K LONG TURN STREET ELBOW	L 45° FTG ELBOW	M DOUBLE LTTY

BATH

1 1/2" Cut List		2" Cut List		3" Cut List	
A1	28 1/4"	B1	5"	C1	11 1/2"
A2	28 1/4"	B2	7"	C2	26 1/2"
				C3	28"
				C4	16 1/2"

OPT. SGL. LAV BATH

1 1/2" Cut List		2" Cut List		3" Cut List	
A1	28 1/4"	B1	5"	C1	11 1/2"
		B2	7"	C2	58"
				C4	16 1/2"

*SCALE: 3/8"=1'-0"

Clayton home building group

REVISION	DATE

MODEL NAME: Summit 76' - The Olympus

MODEL NO.: SMT16763O

BOX SIZE: 16' x 76'

MODEL SQ. FT.: 1,165

DRAWN BY: Parker Merritt

DATE DRAWN: 8/24/2026

DATE PRINTED: 9/3/2026

SCALE: 3/16"=1'

* UNLESS OTHERWISE NOTED

PLAN NO.: SMT-1676-32-1-184

SHEET NAME: 2-D DRAIN LINES

SHEET NO.: PL-2.

File Path:C:\Users\MerrittP\OneDrive - Clayton Homes\Desktop\AutoCAD\922 - Maynardville\184 Inch New Models\Summit Series\SMT-1676-32-1-184 (The Olympus)\SMT-1676-32-1-184.dwg, Last Saved By:MerrittP , Saved Date:9/2/2026 5:45 PM

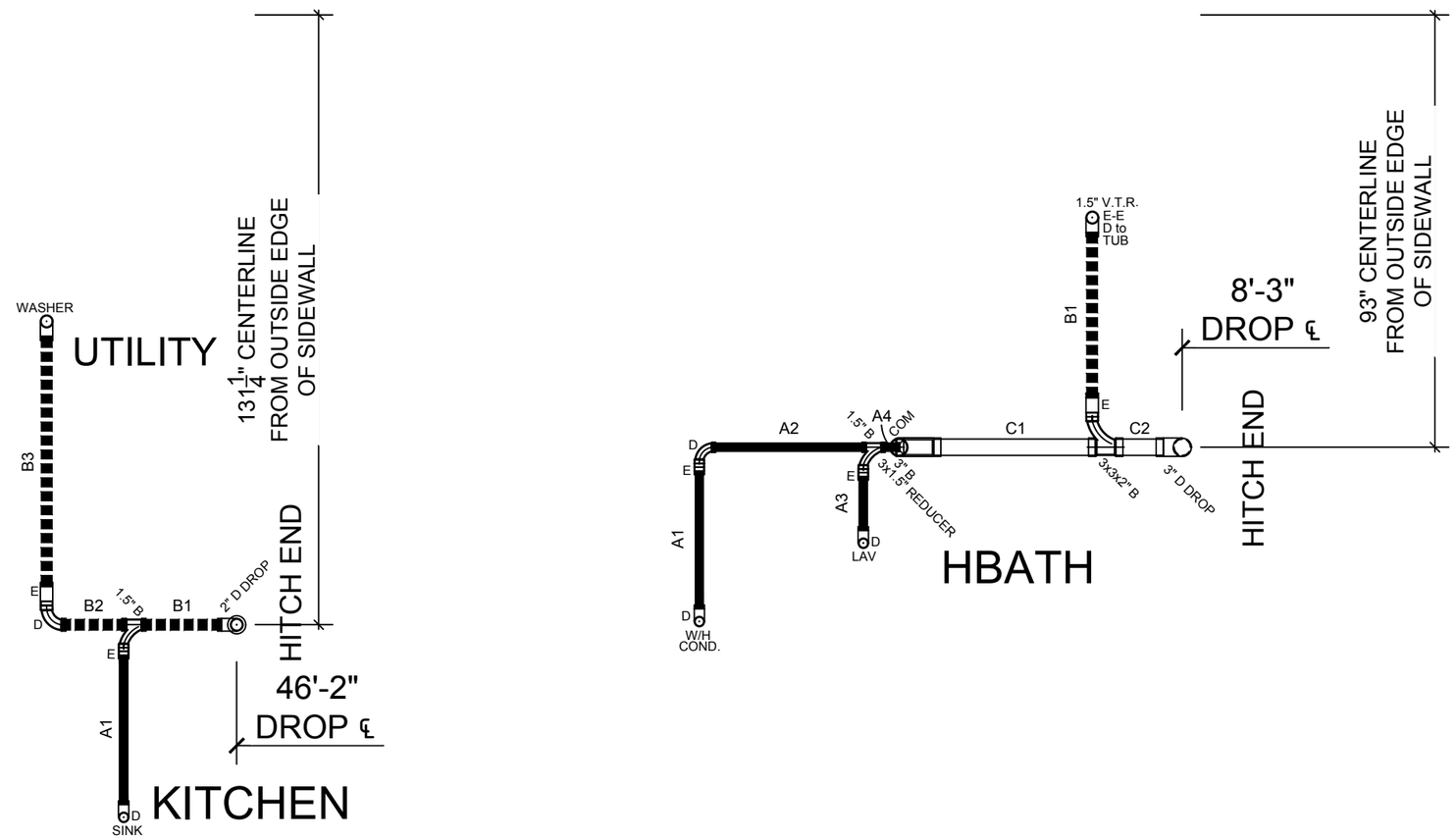

HBATH

1 1/2" Cut List		2" Cut List		3" Cut List	
A1	29 1/2"	B1	35 1/2"	C1	34 3/4"
A2	33"			C2	10 1/8"
A3	11 1/2"				
A4	3 3/4"				

KITCHEN/UTILITY

1 1/2" Cut List		2" Cut List	
A1	32"	B1	17 1/8"
		B2	13 3/4"
		B3	53 3/4"

PIPE SIZES

3"

2"

1 1/2"

PARTS LEGEND

A SANITARY TEE (T-Y)	B LONG TURN (T-Y)	C ~4 BEND	G 4x3 CLOSET ELBOW	H DOUBLE ELL	I 22~2° ELL
D LONG TURN ~4 BEND	E 45° ELL	F DOUBLE SANITARY TEE	J 45° Y	K LONG TURN STREET ELBOW	L 45° FTG ELBOW	M DOUBLE LTTY

*SCALE: 3/8"=1'-0"

Clayton home building group

REVISION	DATE

MODEL NAME: Summit 76' - The Olympus

MODEL NO.: SMT16763O

MODEL SQ. FT.: 1,165

BOX SIZE: 16' x 76'

DRAWN BY: Parker Merritt

DATE DRAWN: 8/24/2026

DATE PRINTED: 9/3/2026

SCALE: 3/16"=1' * UNLESS OTHERWISE NOTED

PLAN NO.: SMT-1676-32-1-184

SHEET NAME: 2-D DRAIN LINES

SHEET NO.: PL-2.1.

File Path:C:\Users\MerrittP\OneDrive - Clayton Homes\Desktop\AutoCAD\922 - Maynardville\184 Inch New Models\Summit Series\SMT-1676-32-1-184 (The Olympus)\SMT-1676-32-1-184.dwg, Last Saved By:MerrittP , Saved Date:9/2/2026 5:45 PM

COLD WATER LINES

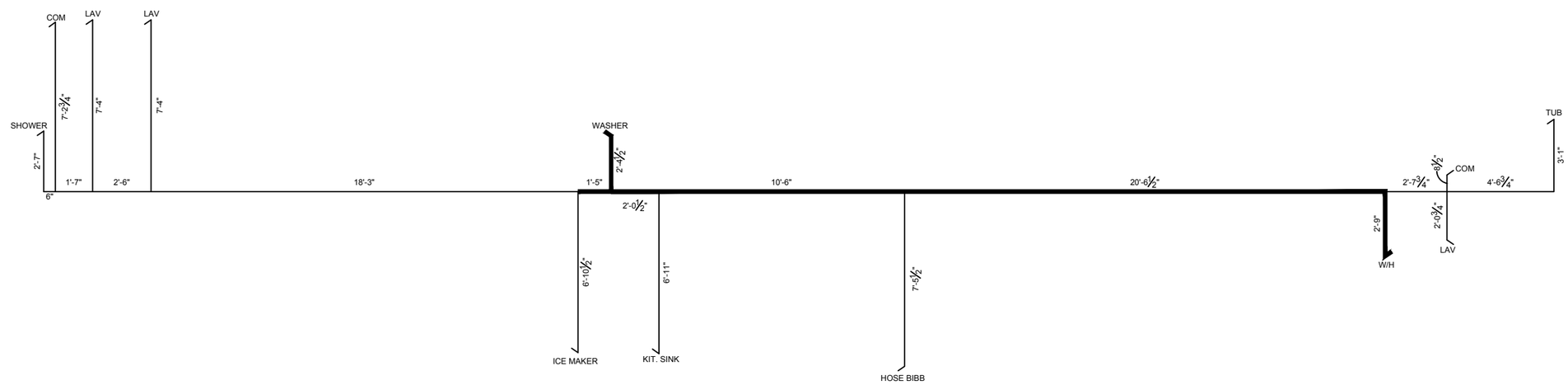

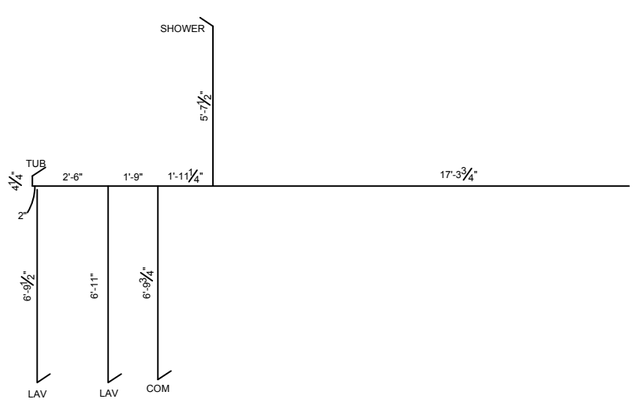

ASCENDING
BATH OPT.

EXTERIOR FAUCET MAY BE PLACED AT ANY LOCATION
AS LONG AS NO MORE THAN FOUR FIXTURES ARE
SUPPLIED BY A 1/2" LINE

= 1/2" PIPE
= 3/4" PIPE

INFORM QA OF LENGTH CHANGES
PIPE LENGTHS SUBJECT TO CHANGE

Clayton home building group

REVISION	DATE

MODEL NAME: Summit 76' - The Olympus
MODEL NO.: SMT16763O
MODEL SQ. FT.: 1,165
BOX SIZE: 16' x 76'

DRAWN BY: Parker Merritt
DATE DRAWN: 8/24/2026
DATE PRINTED: 9/3/2026
SCALE: 3/16"=1'
* UNLESS OTHERWISE NOTED
PLAN NO.: SMT-1676-32-1-184
SHEET NAME: 2-D COLD WTR LINES
SHEET NO.: PL-3.

File Path:C:\Users\MerrittP\OneDrive - Clayton Homes\Desktop\AutoCAD\922 - Maynardville\184 Inch New Models\Summit Series\SMT-1676-32-1-184 (The Olympus)\SMT-1676-32-1-184.dwg, Last Saved By:MerrittP , Saved Date:9/2/2026 5:45 PM

HOT WATER LINES

Pipe Type	Hot Water MDL's			
	Diameter	Length (ft)	Volume (oz)	Volume (gal)
PEX CTS SDR 9	1/2"	64	75.52	0.59
PEX CTS SDR 9	3/4"	35	82.25	0.64
			Total Volume (gal)	1.23
	Maxium Volume is 1.20 gallons			

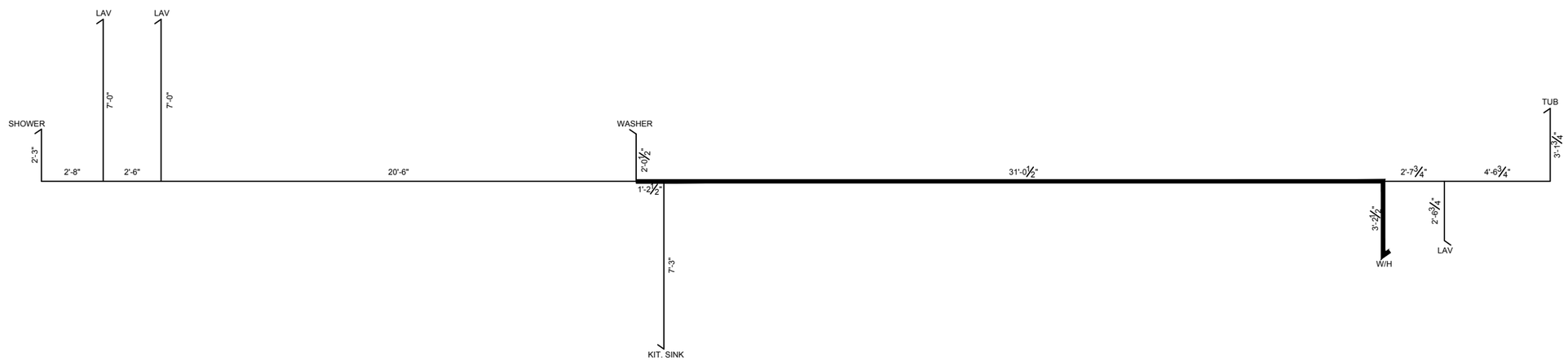

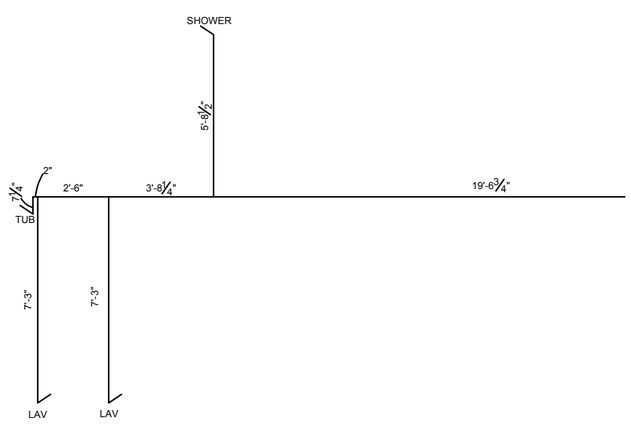

ASCENDING
BATH OPT.

EXTERIOR FAUCET MAY BE PLACED AT ANY LOCATION
AS LONG AS NO MORE THAN FOUR FIXTURES ARE
SUPPLIED BY A 1/2" LINE

= 1/2" PIPE
= 3/4" PIPE

INFORM QA OF LENGTH CHANGES
PIPE LENGTHS SUBJECT TO CHANGE

Clayton home building group

REVISION	DATE

MODEL NAME: Summit 76' - The Olympus
MODEL NO.: SMT16763O
MODEL SQ. FT.: 1,165
BOX SIZE: 16' x 76'

DRAWN BY: Parker Merritt
DATE DRAWN: 8/24/2026
DATE PRINTED: 9/3/2026
SCALE: 3/16"=1'
* UNLESS OTHERWISE NOTED
PLAN NO.: SMT-1676-32-1-184
SHEET NAME: 2-D HOT WTR LINES
SHEET NO.: PL-3.1.

File Path:C:\Users\MerrittP\OneDrive - Clayton Homes\Desktop\AutoCAD\922 - Maynardville\184 Inch New Models\Summit Series\SMT-1676-32-1-184 (The Olympus)\SMT-1676-32-1-184.dwg, Last Saved By:MerrittP , Saved Date:9/2/2026 5:45 PM

*ALL BEDROOMS ARE UNDER 35' FOR EGRESS

NOTE ALL FLOOR REGISTERS ARE 4x10 UNLESS OTHERWISE NOTED

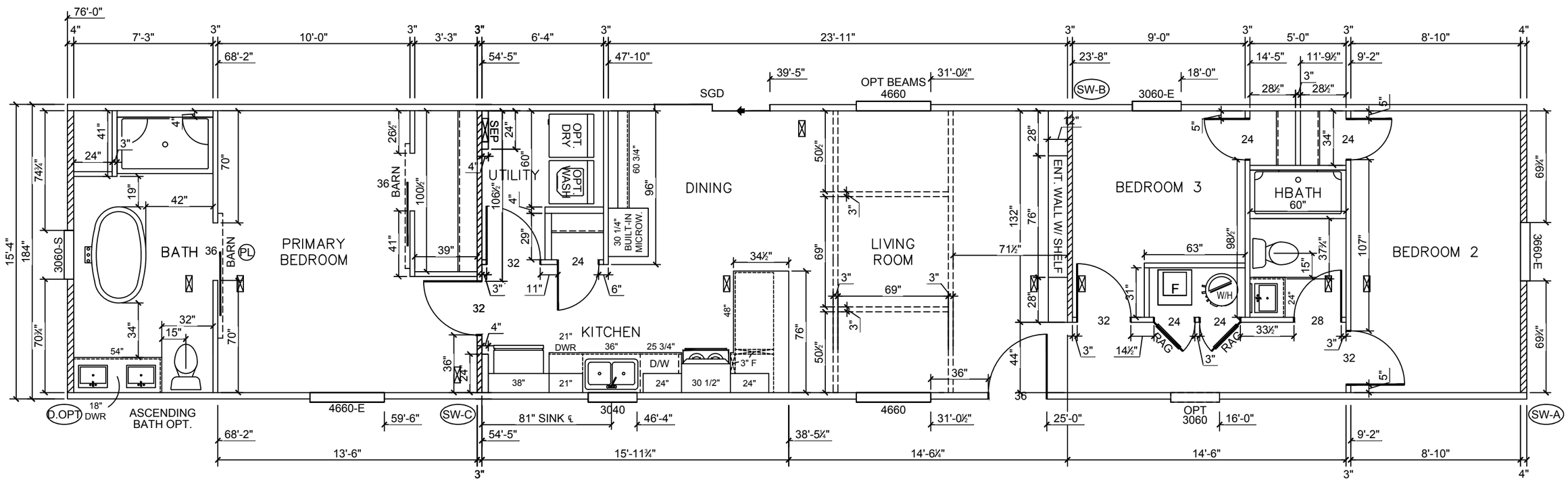

Model # SMT-1676-32-1-184 - Bath Opt. Minimum Joist Spacing 16 "

Box Width =	184 "	Single wide	No Offset Box
Box Length =	76 ft.	99.5" 10" MIN.IBEAM	No Clerestory
No Skylights			No Origami Dormer
No Porches			No Sunken Floor
Joist Size =	#2 sp 2x6	Lags 9Mx3"	No Parapet Roof

Version R14.02

Wind Zone 1 Standard Roof — 7/16" Rated Sheathing and Ceiling Board with 15 ga staple @ 6/12 (286,315) Chords: 6. 2x4 SPF #3 Top Plate spliced w/ 3x4 MCP & 1x6 SPF Rail spliced w/ 3x4 MCP — 96 inch sidewall

Diaphragm Construction: Block Dist. X=0'

Shearwall	Dist./ Hitch	Length	PLF	# of Joists	Lags	Notes	SW1/SW2
A	0 '	139.5 "	250	2	3/3	Split Shearwall *	69.75/69.75
Dopt	76 '	145.5 "	250	2	3/3	Split Shearwall	70.75/74.75

Wind Zone 2 Standard Roof — 7/16" Rated Sheathing and Ceiling Board with 15 ga staple @ 6/12 (286,315) Chords: 6. 2x4 SPF #3 Top Plate spliced w/ 3x4 MCP & 1x6 SPF Rail spliced w/ 3x4 MCP — 96 inch sidewall

Diaphragm Construction: Block Dist. X=0'

Shearwall	Dist./ Hitch	Length	PLF	# of Joists	Lags	Notes	SW1/SW2
A	0 '	139.5 "	250	2	3/3	Split Shearwall *	69.75/69.75
B	23.79 '	128 "	430	3	4/1		
C	54.54 '	142.5 "	430	4	4/4	Split Shearwall	36/106.5
Dopt	76 '	145.5 "	250	2	3/3	Split Shearwall	70.75/74.75

Wind Zone 3 Standard Roof — 7/16" Rated Sheathing and Ceiling Board with 15 ga staple @ 6/12 (286,315) Chords: 6. 2x4 SPF #3 Top Plate spliced w/ 3x4 MCP & 1x6 SPF Rail spliced w/ 3x4 MCP — 96 inch sidewall

Diaphragm Construction: Block Dist. X=0'

Shearwall	Dist./ Hitch	Length	PLF	# of Joists	Lags	Notes	
A	0 '	139.5 "	250	2	3/3	Split Shearwall *	69.75/69.75
B	23.79 '	128 "	520	4	5/2		
C	54.54 '	142.5 "	430	4	4/4	Split Shearwall	36/106.5
Dopt	76 '	145.5 "	250	2	3/3	Split Shearwall	70.75/74.75

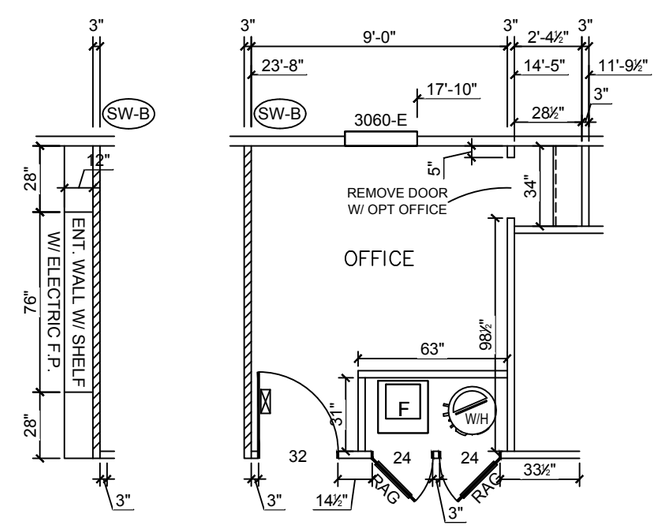

"ASCENDING BATH OPTION"

Clayton home building group

DATE	REVISION

MODEL NAME: Summit 76' - The Olympus

MODEL NO.: SMT16763O

MODEL SQ. FT.: 1,165

BOX SIZE: 16' x 76'

DRAWN BY: Parker Merritt

DATE DRAWN: 8/24/2026

DATE PRINTED: 9/3/2026

SCALE: 3/16"=1' * UNLESS OTHERWISE NOTED

PLAN NO.: SMT-1676-32-1-184

SHEET NAME: SECOND. PLAN

SHEET NO.: A-2.1.

File Path:C:\Users\MerrittP\OneDrive - Clayton Homes\Desktop\AutoCAD\922 - Maynardville\184 Inch New Models\Summit Series\SMT-1676-32-1-184 (The Olympus)\SMT-1676-32-1-184.dwg, Last Saved By:MerrittP, Saved Date:9/3/2026 3:51 PM

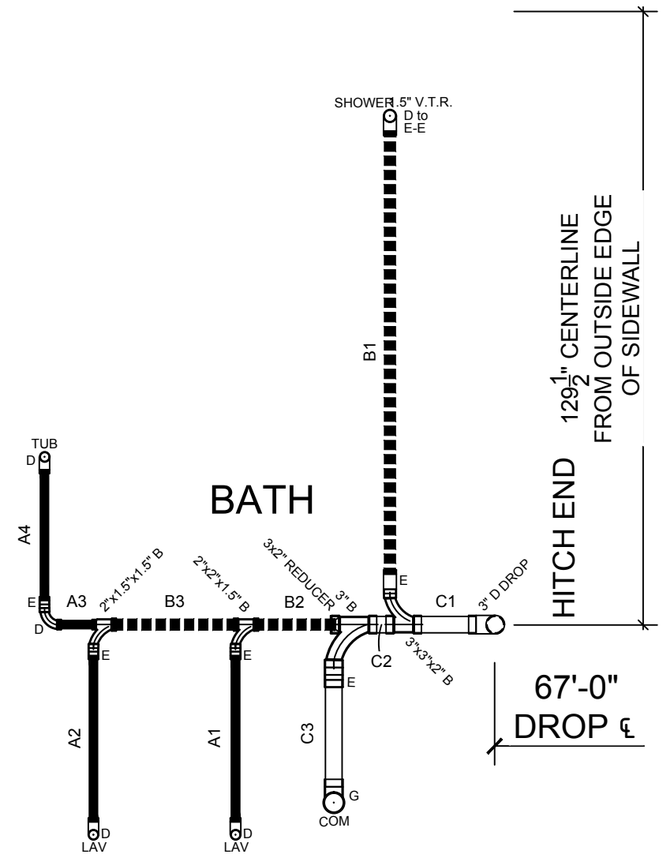

PIPE SIZES
3"
2"
1 1/2"

PARTS LEGEND

A SANITARY TEE (T-Y)	B LONG TURN (T-Y)	C ~4 BEND	G 4x3 CLOSET ELBOW	H DOUBLE ELL	I 22~2° ELL
D LONG TURN ~4 BEND	E 45° ELL	F DOUBLE SANITARY TEE	J 45° Y	K LONG TURN STREET ELBOW	L 45° FTG ELBOW
M DOUBLE LTTY					

ASCENDING BATH OPT.

1 1/2" Cut List		2" Cut List		3" Cut List	
A1	35"	B1	93 1/2"	C1	13"
A2	35"	B2	17"	C2	5"
A3	8"	B3	26 1/2"	C3	22 1/2"
A4	27 1/2"				

"ASCENDING BATH OPTION"
*SCALE: 3/8"=1'-0"

Clayton home building group

REVISION	DATE

MODEL NAME: Summit 76' - The Olympus
MODEL NO.: SMT16763O
MODEL SQ. FT.: 1,165
BOX SIZE: 16' x 76'

DRAWN BY: Parker Merritt
DATE DRAWN: 8/24/2026
DATE PRINTED: 9/3/2026
SCALE: 3/16"=1'
* UNLESS OTHERWISE NOTED
PLAN NO.: SMT-1676-32-1-184
SHEET NAME: 2-D DRAIN LINES
SHEET NO.: PL-2.2.

File Path:C:\Users\MerrittP\OneDrive - Clayton Homes\Desktop\AutoCAD\922 - Maynardville\184 Inch New Models\Summit Series\SMT-1676-32-1-184 (The Olympus)\SMT-1676-32-1-184.dwg, Last Saved By:MerrittP , Saved Date:9/2/2026 5:45 PM

Description of Materials

U.S. Department of Housing and Urban Development
Department of Veterans Affairs
Farmers Home Administration

OMB Control No. 2502-0313
(exp. 05/31/2011)

Public reporting burden for this collection of information is estimated to average 30 minutes per response, including the time for reviewing instructions, searching existing data sources, gathering and maintaining the data needed, and completing and reviewing the collection of information. This agency may not collect this information, and you are not required to complete this form, unless it displays a currently valid OMB control number.

The National Housing Act (12 USC 1703) authorizes insuring financial institutions against default losses on single family mortgages. HUD must evaluate the acceptability and value of properties to be insured. The information collected here will be used to determine if proposed construction meets regulatory requirements and if the property is suitable for mortgage insurance. Response to this information collection is mandatory. No assurance of confidentiality is provided.

(●) Proposed Construction ( ) Under Construction No. _____ (To be inserted by HUD, VA or FmHA)

Property address (Include City and State)

Name and address of Mortgagor or Sponsor	Name and address of Contractor or Builder
	Clayton Homes-Maynardville

Instructions

1. For additional information on how this form is to be submitted, number of copies, etc., see the instructions applicable to the HUD Application for Mortgage Insurance, VA Request for Determination of Reasonable Value, or FmHA Property Information and Appraisal Report, as the case may be.
2. Describe all materials and equipment to be used, whether or not shown on the drawings, by marking an X in each appropriate check-box and entering the information called for each space. If space is inadequate, enter "See misc." and describe under item 27 or on an attached sheet. **The use of paint containing more than the percentage of lead by weight permitted by law is prohibiited.**
3. Work not specifically described or shown will not be considered unless required, then the minimum acceptable will be assumed. Work exceeding minimum requirements cannot be considered unless specifically described.
4. Include no alternates, "or equal" phrases, or contradictory items. (Consideration of a request for acceptance of substitute materials or equipment is not thereby precluded.)
5. Include signatures required at the end of this form.
6. The construction shall be completed in compliance with the related drawings and specifications, as amended during processing. The specifications include this Description of Materials and the applicable Minimum Property Standards.

1. Excavation

Bearing soil, type _____

2. Foundations

Footings concrete mix _____ strength psi _____ Reinforcing _____

Foundation wall material _____ Reinforcing _____

Interior foundation wall material _____ Party foundation wall _____

Columns material and sizes _____ Piers material and reinforcing _____

Girders material and sizes 12"I-Beam 11.8&10.8 lb per ft(66"-76") Sills material 8" Block min

Basement entrance areaway _____ Window areaways _____

Waterproofing _____ Footing drains _____

Termite protection _____

Basementless space ground cover _____ insulation _____ foundation vents _____

Special foundations _____

Additional information

3. Chimneys

Material _____ Prefabricated (make and size) _____

Flue lining material _____ Heater flue size _____ Fireplace flue size _____

Vents (material and size) gas or oil heater _____ water heater _____

Additional information

4. Fireplaces

Type ( ) solid fuel ( ) gas-burning ( ) circulator (make and size) _____ Ash dump and clean-out_____

Fireplace facing _____ lining _____ hearth _____ mantel _____

Additional information

5. Exterior Walls

Wood frame wood grade, and species 2x4 #3 spf min ☐ Corner bracing Building paper or felt _____

Sheathing Thermoply OX3 thickness 1/4" width 4' ◉ solid ○ spaced _____ o.c. ○ diagonal_____

Siding GP vinyl siding grade .038 type Parkside size DBL 41/2 exposure 160mph fastening 16"oc

Shingles GAF grade _____ type ARCH size _____ exposure W/Z 3 fastening 4-6 MIN nail

Stucco _____ thickness _____ Lath _____ weight _____ lb.

Masonry veneer _____ Sills _____ Lintels _____ Base flashing _____

Masonry ○ solid ○ faced ○ stuccoed total wall thickness _____ facing thickness _____ facing material _____

Backup material _____ thickness _____ bonding _____

Door sills _____ Window sills _____ Lintels _____ Base flashing _____

Interior surfaces dampproofing, _____ coats of _____ furring _____

Additional information

Exterior painting material _____ number of coats _____

Gable wall construction ○ same as main walls ○ other construction_____

6. Floor Framing

Joists wood, grade, and species 2X6X16 #2 other _____ bridging _____ anchors _____

Concrete slab ○ basement floor ○ first floor ○ ground supported ○ self-supporting mix _____ thickness _____

reinforcing _____ insulation _____ membrane _____

Fill under slab material _____ thickness _____

Additional information

7. Subflooring (Describe underflooring for special floors under item 21)

Material grade and species _____ size _____ type _____

Laid ○ first floor ○ second floor ○ attic _____ sq. ft. ○ diagonal ○ right angles

Additional information

8. Finish Flooring (Wood only. Describe other finish flooring under item 21)

Location	Rooms	Grade	Species	Thickness	Width	Bldg. Paper	Finish
First floor							
Second floor							
Attic floor	sq. ft.						

Additional information

9. Partition Framing

Studs wood, grade, and species #3spf min size and spacing 2"x3" & 2"x4" #3spf min Other _____

Additional information

10. Ceiling Framing

Joists wood, grade, and species _____ Other _____ Bridging _____

Additional information

11. Roof Framing

Rafters wood, grade, and species Clayton Supply Roof trusses (see detail) grade and species min stud spf

Additional information Woodperfect Trusses. All material meets HUD standards.

12. Roofing

Sheathing wood, grade, and species 7/16" OSB ◉ solid ○ spaced _____ o.c.

Roofing _____ grade Exposure size 1 type LP OSB

Underlay Felt paper weight or thickness 15lb size _____ fastening staples

Built-up roofing _____ number of plies _____ surfacing material _____

Flashing material _____ gage or weight _____ ☐ gravel stops ☐ snow guards

Additional information

13. Gutters and Downspouts

Gutters material _____ gage or weight _____ size _____ shape _____

Downspouts material _____ gage or weight _____ size _____ shape _____ number _____

Downspouts connected to ☐ Storm sewer ☐ sanitary sewer ☐ dry-well ☐ Splash blocks material and size _____

Additional information

14. Lath and Plaster

Lath ☐ walls ☐ ceilings material _____ weight or thickness _____ Plaster coats _____ finish _____

Dry-wall ☐ walls ☐ ceilings material _____ thickness _____ finish _____

Joint treatment

15. Decorating (Paint, wallpaper, etc.)

Rooms	Wall Finish Material and Application	Ceiling Finish Material and Application
Kitchen	Pre finished sheet rock	finished sheet rock ceiling board
Bath	Pre finished sheet rock	finished sheet rock ceiling board
Other		

Additional information All material meets HUD standards.

16. Interior Doors and Trim

Doors type Clayton Supply 2 panel pre engineered material pre engineered thickness 1 1/8"

Door trim type pre finished panel material _____ Base type _____ material prefinished size 2"

Finish doors whits trim _____

Other trim (item, type and location) _____

Additional information All material meets HUD standards.

17. Windows

Windows type Low E Thermopane make Clayton Window material Vinyl sash thickness _____

Glass grade _____ ☐ sash weights ☑ balances, type _____ head flashing _____

Trim type _____ material _____ Paint _____ number coats _____

Weatherstripping type poly pile at exterior face/flexable vinyl bulb material _____ Storm sash, number _____

Screens ☐ full ☐ half type _____ number _____ screen cloth material _____

Basement windows type _____ material _____ screens, number _____ Storm sash, number _____

Special windows _____

Additional information All material meets HUD standards.

18. Entrances and Exterior Detail

Main entrance door material Dealer Wharehouse width 36" thickness 1 1/2" Frame material metal thickness _____

Other entrance doors material Dealer Warehouse width 32" thickness 1 1/2 Frame material metal thickness _____

Head flashing _____ Weatherstripping type _____ saddles _____

Screen doors thickness _____ number _____ screen cloth material _____ Storm doors thickness _____ number _____

Combination storm and screen doors thickness 1 3/8" number _____ screen cloth material Glass

Shutters ☐ hinged ☐ fixed Railings _____ Attic louvers _____

Exterior millwork grade and species _____ Paint _____ number coats _____

Additional information All material meets HUD standards.

19. Cabinets and Interior Detail

Kitchen cabinets, wall units material Custom built lineal feet of shelves 8' shelf width 11 1/4"

Base units material Wood counter top formica edging formica

Back and end splash _____ Finish of cabinets _____ number coats _____

Medicine cabinets make custom built model _____

Other cabinets and built-in furniture _____

Additional information All material meets HUD standards.

20. Stairs

Stair	Treads		Risers		Strings		Handrail		Balusters	
	Material	Thickness	Material	Thickness	Material	Size	Material	Size	Material	Size
Basement										
Main										
Attic										

Disappearing make and model number _____

Additional information

21. Special Floors and Wainscot (Describe Carpet as listed in Certified Products Directory)

	Location	Material, Color, Border, Sizes, Gage, Etc.	Threshold Material	Wall Base Material	Underfloor Material
Floors	Kitchen	Standard floor vinyl			
	Bath	Standard floor vinyl			
	LR & BRs	Standard floor vinyl			

	Location	Material, Color, Border, Cap. Sizes, Gage, Etc.	Height	Height Over Tub	Height in Showers (From Floor)
Wainscot	Bath				

Additional information

22. Plumbing

Fixture	Number	Location	Make	MFR's Fixture Identification No.	Size	Color
Sink	1	kitchen	double bowl	bristol bay	33x19x6	stainless
Lavatory	2	bathrooms	ceramic	lasalle	12x20	white
Water closet						
Bathtub	1	Master Bath	fiberglass	better bath	54"	white
Shower over tub	1	front bath	fiberglass	better bath	54"	white
Stall shower	1	Master Bath	fiberglass	better bath	48"	white
Laundry trays						

Bathroom accessories ☐ Recessed material _____ number _____ ☐ Attached material _____ number _____

Additional information All material meets HUD standards.

☐ Curtain rod ☐ Door ☐ Shower pan material _____ * (Show and describe individual system in complete detail in separate drawings and specifications according to requirements.)

Water supply ☐ public ☐ community system ☐ individual (private) system*

Sewage disposal ☐ public ☐ community system ☐ individual (private) system*

House drain (inside) ☐ cast iron ☐ tile ☒ other PVC House sewer (outside) ☐ cast iron ☐ tile ☐ other _____

Water piping ☐ galvanized steel ☐ copper tubing ☒ other PEX _____ Sill cocks, number _____

Domestic water heater type Electric make and model Rheem heating capacity 95ef gph. 100° rise.

Storage tank material _____ capacity 40 or 50 gallons

Gas service ☐ utility company ☐ liq. pet. gas ☐ other _____ ☐ Gas piping ☐ cooking ☐ house heating

Footing drains connected to ☐ storm sewer ☐ sanitary sewer ☐ dry well ☐ Sump pump make and model _____

capacity _____ discharges into _____

Additional information

23. Heating

☐ Hot water ☐ Steam ☐ Vapor ☐ One-pipe system ☐ Two-pipe system

☐ Radiators ☐ Convectors ☐ Baseboard radiation Make and model _____

☐ Radiant panel ☐ floor ☐ wall ☐ ceiling Panel coil material _____

☐ Circulator ☐ Return pump Make and model _____ capacity _____ gpm.

Boiler make and model _____ Output _____ Btuh. net rating _____ Btuh.

Additional information

Warm air ☐ Gravity ☐ Forced Type of system _____

Duct material supply _____ return _____ Insulation _____ thickness _____ ☐ Outside air intake

Furnace: make and model _____ Input _____ Btuh. output _____ Btuh.

Additional information

☐ Space heater ☐ floor furnace ☐ wall heater Input _____ Btuh. output _____ Btuh. number units _____

Make, model _____

Additional information

Controls make and types _____

Additional information

Fuel: ☐ Coal ☐ oil ☐ gas ☐ liq. pet. gas ☐ electric ☐ other _____ storage capacity _____

Additional information

Firing equipment furnished separately ☐ Gas burner, conversion type ☐ Stoker hopper feed ☐ bin feed

Oil burner ☐ pressure atomizing ☐ vaporizing _____

Make and model _____

Control _____

Additional information

Electric heating system type Carrier Input _____ watts @ 230 volts output 24000 Btuh.

Additional information

Ventilating equipment ☐ attic fan, make and model _____ capacity _____ cfm.

☑ kitchen exhaust fan, make and model VENTLINE 100CFM

Other heating, ventilating, or cooling equipment _____

Additional information ALL MATERIAL MEETS HUD STANDARDS

24. Electric Wiring

Service ☐ overhead ☐ underground Panel ☐ fuse box ☐ circuit-breaker make Eaton AMP's 200 No. circuits 40

Wiring ☐ conduit ☐ armored cable ☐ nonmetallic cable ☐ knob and tube ☐ other _____

Special outlets ☐ range ☐ water heater ☐ other _____

☐ Doorbell ☐ Chimes ☐ Push-button locations _____

Additional information

All material meets HUD standards

25. Lighting Fixtures

Total number of fixtures 19 Total allowance for fixtures, typical installation, $ 200.00

Nontypical installation _____

Additional information

26. Insulation

Location	Thickness	Material, Type, and Method of Installation	Vapor Barrier
Roof	r38-16.8"	Knauf blown	on ceiling board
Ceiling			
Wall	r13-3.5"	Knauf	kraft
Floor	r27-6.5"	Knauf	

27. Miscellaneous: (Describe any main dwelling materials, equipment, or construction items not shown elsewhere; or use to provide additional information where the space provided was inadequate. Always reference by item number to correspond to numbering used on this form.)

Hardware (make, material, and finish.)

Special Equipment (State material or make, model and quantity. Include only equipment and appliances which are acceptable by local law, custom and applicable FHA standards. Do not include items which, by established custom, are supplied by occupant and removed when he vacates premises or chattles prohibited by law from becoming realty.)

Porches

Terraces

Garages

Walks and Driveways

Driveway width _____ base material _____ thickness _____ surfacing material _____ thickness _____

Front walk width _____ material _____ thickness _____ Service walk width _____ material _____ thickness _____

Steps material _____ treads _____ risers _____ Cheek walls _____

Other Onsite Improvements

(Specify all exterior onsite improvements not described elsewhere, including items such as unusual grading, drainage structures, retaining walls, fence, railings, and accessory structures.)

Landscaping, Planting, and Finish Grading

Topsoil _____ thick ☐ front yard ☐ side yards ☐ rear yard to _____ feet behind main building

Lawns (seeded, sodded, or sprigged) ☐ front yard _____ ☐ side yards _____ ☐ rear yard _____

Planting ◯ as specified and shown on drawings ◯ as follows:

_____ Shade trees deciduous_____ caliper

_____ Low flowering trees deciduous _____ to _____

_____ High-growing shrubs deciduous _____ to _____

_____ Medium-growing shrubs deciduous _____ to _____

_____ Low-growing shrubs deciduous _____ to _____

_____ Evergreen trees _____ to _____ B & B

_____ Evergreen shrubs _____ to _____ B & B

_____ Vines, 2-year _____

Other

Identification—This exhibit shall be identified by the signature of the builder, or sponsor, and/or the proposed mortgagor if the latter is known at the time of application.

Date (mm/dd/yyyy)_____ Signature

Signature